SPARE PARTS LIST

MODEL NO. DJN161

ITEM	PART NO.	DESCRIPTION	QTY	NOTE
001	266048-4	TAPPING SCREW 4X40	4	
002	141878-3	GEAR HOUSING COMPLETE	1	
003	331438-1	ROD	1	
004	212222-2	NEEDLE BEARING 1612	1	
005	326249-7	CRANK SHAFT	1	
006	227314-4	SPUR GEAR 31	1	
007	253215-0	FLAT WASHER 8	1	
008	254002-0	WOODRUFF KEY 3	1	
009	267133-6	FLAT WASHER 6	1	
010	226158-9	GEAR COMPLETE 16-36	1	
011	266026-4	TAPPING SCREW BIND CT 4X12	1	
012	344116-4	STOPPER	1	
013	256111-1	PIN 6	1	
014	322703-9	RAM	1	
015	322702-1	PUNCH HOLDER	1	
016	265880-3	H.S.SET SCREW(CONE POINT)M5X8	1	
017	A-83951	PUNCH	1	
018	A-15051	DIE	1	
019	322701-3	DIE HOLDER	1	
020	266080-8	HEX. SOCKET HEAD BOLT M3X12	2	
021	322748-7	LOCK NUT	1	
022	442191-5	GASKET	1	
023	141877-5	GEAR HOUSING COVER COMPLETE	1	
024	619312-6	ARMATURE	1	
025	631714-6	LED CIRCUIT	1	
026	638627-2	YOKE UNIT	1	
027	632A66-4	ENDBELL COMPLETE	1	
028	815T00-5	DJN161 NAME PLATE	1	
029	265995-6	TAPPING SCREW 4X18	5	
030	419566-3	SWITCH KNOB	1	
031	187839-9	HOUSING SET INC. 36	1	
032	419519-2	SWITCH LEVER	1	
033	650579-7	SWITCH 1246.3223	1	
034	620243-4	CONTROLLER	1	
035	644808-8	TERMINAL	1	
036	187839-9	HOUSING SET INC. 31	1	
037	191971-3	CARBON BRUSH CB-430	1	
038	643929-3	BRUSH HOLDER CAP	2	
039	419518-4	HOLDER CAP COVER	2	
A01	781028-4	WRENCH 32	1	
A02	783208-8	HEX. WRENCH 2.5	1	
A03	***DC18RC	DC18RC FAST CHARGER	1	
A04	196015-4	BATTERY BL1830 SET	2	
A05	450128-8	BATTERY COVER	1	
A06	142004-7	PLASTIC CARRYING CASE	1	
A07	804B10-9	DJN161RFE PLASTIC CASE LABEL	2	

SERVICE DRAWING
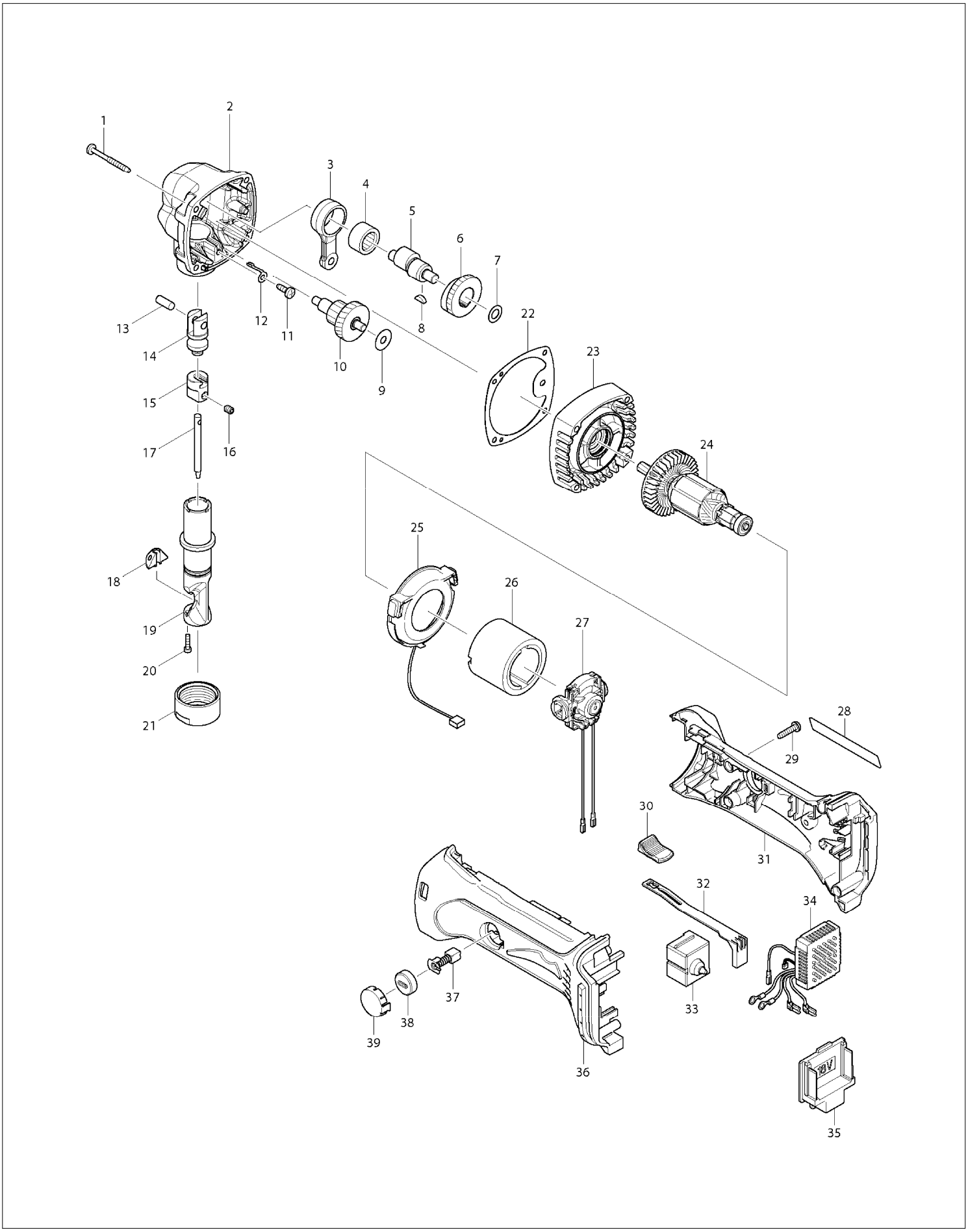
MODEL NO. DJN161